BIG BIKE PARTS®

INSTALLATION INSTRUCTIONS

Copyright© 2015 by Big Bike Parts, Inc. No part of this instruction sheet may be reproduced without the written permission of Big Bike Parts, Inc.

PART NO. 21-342 BEACHCOMBER HIGHWAY BOARD UNIVERSAL 6 MM PIN

2/23/2015

TOOLS NEEDED: NEEDLE NOSE PLIERS 14MM SOCKET WRENCH 8MM ALLEN WRENCH PHILLIPS SCREWDRIVER THREADLOCKER 4MM ALLEN WRENCH

HARDWARE INCLUDED:
(2) M6-1.0 X 35MM LONG BUTTON SOCKET HEAD CAP SCREW (BBP# S5061035PK8)
(4) M4-0.7 X 6MM LONG PHILLIPS PAN HEAD MACHINE SCREW (BBP# S1040706PZ)
(12) M4 LOCK WASHER (BBP# W204PZ)
(2) M10-1.5 X 25MM LONG SOCKET HEAD CAP SCREW (BBP# S6101525PC)

NOTE: WE RECOMMEND USING THREADLOCKER ON ALL HARDWARE INSTALLED.

1. REMOVE THE PEG FROM THE PASSENGER PEG MOUNTING BRACKET, BY REMOVING THE COTTER PIN OR E-CLIP AND THE PEG PIN WITH NEEDLE NOSE PLIERS.

2. SLIDE THE REAR PEG ADAPTER INTO THE PASSENGER PEG MOUNTING BRACKET UNTIL THE PIN HOLE IN THE PASSENGER PEG MOUNTING BRACKET AND THE HOLE IN THE REAR PEG ADAPTER ARE ALIGNED. THEN NOTE THE DISTANCE BETWEEN THE BACK OF THE REAR PEG ADAPTER AND THE BACK OF THE PASSENGER PEG MOUNTING BRACKET WHEN THE TOP OF THE REAR PEG ADAPTER AND THE PASSENGER PEG MOUNTING BRACKET ARE PARALLEL.

3. IF THERE IS A GAP BETWEEN THE BACK OF THE REAR PEG ADAPTER AND THE PASSENGER PEG MOUNTING BRACKET PULL THE REAR PEG ADAPTER OUT OF THE PASSENGER PEG MOUNTING BRACKET AND ADD THE TWO M4 – 0.7 X 8MM PHILLIPS PAN HEAD SCREWS AND UP TO 3, M4 LOCK WASHERS WITH EACH SCREW, INTO THE TWO M4 – 0.7 HOLES IN THE BACK OF THE REAR PEG ADAPTER TO FILL THE NOTED DISTANCE FROM STEP 2. MAKE SURE THE SCREW HEADS ARE TIGHT AGAINST PEG ADAPTER OR LOCK WASHERS.

4. SLIDE THE REAR PEG ADAPTER INTO THE PASSENGER PEG MOUNTING BRACKET AND THREAD THE M6-1.0 X 35MM LONG BUTTON HEAD CAP SCREW THROUGH THE PIN HOLE AND REAR PEG ADAPTER USING A 4MM ALLEN WRENCH.

5. ONCE THE REAR PEG ADAPTER IS AT THE CORRECT ANGLE TIGHTEN THE M6-1.0 X 35MM LONG BUTTON HEAD CAP SCREW.

6. REPEAT STEPS 1-5 FOR THE OTHER SIDE.

7. INSTALL THE BOARD DIRECTLY TO THE PEG ADAPTERS USING THE 8MM ALLEN WRENCH AND THE M10-1.5 X 25MM BOLT PROVIDED.

8. **IF AN OFFSET EXTENSION IS BEING USED**, INSTALL THE EXTENSIONS ONTO THE PEG ADAPTERS USING THE 8MM ALLEN WRENCH AND THE M10-1.0 X 25MM BOLT PROVIDED. INSTALL THE BOARD ONTO THE EXTENSION USING THE 8MM ALLEN WRENCH, 14MM SOCKET WRENCH, THE M10-1.5 X 30MM BOLT, AND THE NUT PROVIDED. PLACE ONE OF THE M10 ALUMINUM SPACERS ON THE M10-1.5 X 30MM BOLT BEFORE INSTALLING. ADJUST THE BOARD AND EXTENSION TO YOUR PREFERRED POSITION AND TIGHTEN DOWN.

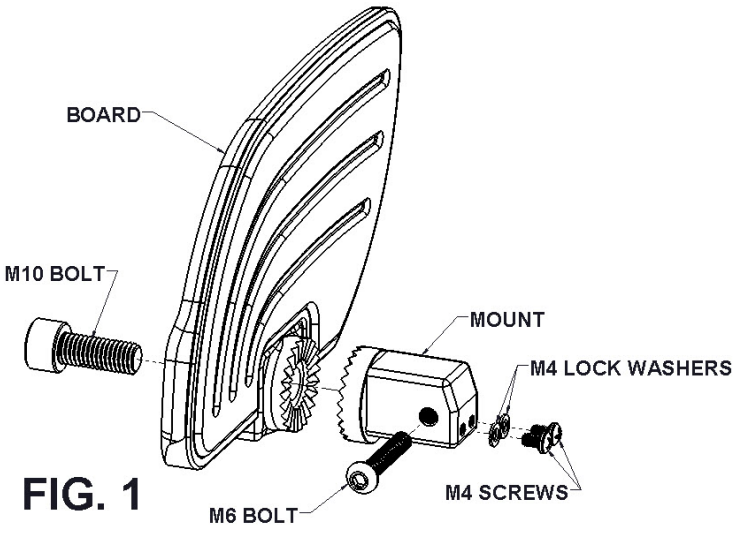

FIG. 1

Scan code with your smartphone to view video