BIG BIKE PARTS® INSTALLATION INSTRUCTIONS

Copyright© 2002 by Big Bike Parts, Inc. No part of this instruction sheet may be reproduced without the written permission of Big bike Parts, Inc.™

PASSENGER BOARD LIGHT FOR HONDA
PART NO. 52-619 GL1800 GOLD WING

Revised 12/13/06

TOOLS REQUIRED: 5MM ALLEN WRENCH, AWL, PHILLIPS SCREWDRIVER, WIRE CRIMPERS, DRILL AND 1/8" DRILL BIT

INSTALLATION:
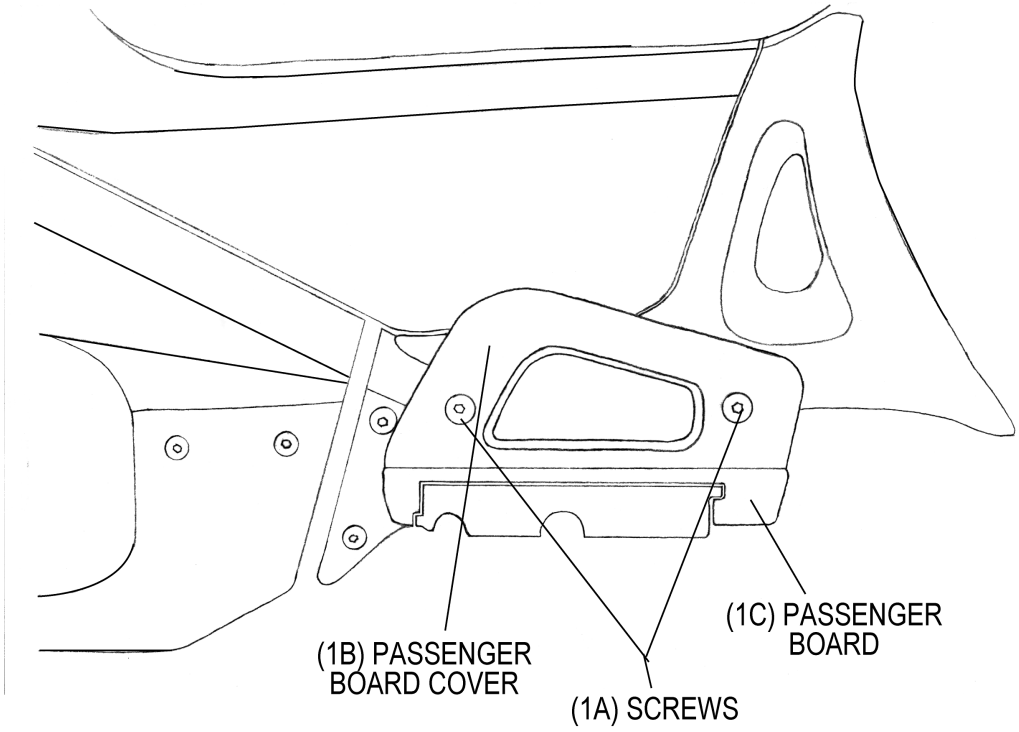
1. PLACE BIKE ON CENTER STAND.
2. REMOVE THE RUBBER STOPPER (THAT KEEPS THE CENTER STAND FROM HITTING THE BIKE) FROM UNDER THE BIKE.
3. INSTALL THE NEW RUBBER STOPPER PROVIDED WITH PART.
4. USING 5MM ALLEN WRENCH REMOVE THE TWO SCREWS (1A) HOLDING THE PASSENGER BOARD COVER (1B) TO THE PASSENGER BOARD (1C).
5. CUT OUT THE DRILLING TEMPLATE PROVIDED AND TAPE INTO THE RECESSED AREA OF PASSENGER BOARD COVER (1B).
6. MARK THE CENTER OF THE HOLES WITH THE AWL. DRILL A 1/8” HOLE AT EACH MARK.
7. CLEAN THE RECESSED AREA WITH RUBBING ALCHOHOL.
8. RUN THE LIGHT STRIP WIRES THROUGH THE BACK HOLE. REMOVE THE BACKING ON LIGHT STRIP TAPE AND STICK THE LIGHT STRIPS TO THE BOARD COVER.
9. REMOVE THE BACKING FROM THE TAPE ON THE LIGHT HOUSING AND STICK THE LIGHT HOUSING INTO PLACE. USE WASHERS AND SCREWS PROVIDED TO SECURE IN PLACE.
10. REINSTALL THE PASSENGER BOARD COVER.
11. REMOVE THE SIDE COVER AND ROUTE THE WIRES DOWN THE SADDLEBAG CRASH BAR AND RUN TO THE FUSE PANEL. WIRE INTO THE ACCESSORY TERMINAL IN FUSE PANEL.
12. REPEAT STEPS #4 THROUGH #11 FOR THE OTHER SIDE.