**BIG BIKE PARTS®**

Copyright© 2001 by Big Bike Parts, Inc.
No part of this instruction sheet may be reproduced without the written permission of Big Bike Parts, Inc.©

# INSTALLATION INSTRUCTIONS

LOWER WIND DEFLECTORS
PART NO. 52-66OL, 52-661L, 52-662L, 52-664L, 52-665L, 52-666L, 52-667L, 52-668L
HONDA GL1800 GOLD WING

Revised 9/8/2011

ITEMS REQUIRED: 5MM ALLEN WRENCH FLAT BLADE SCREWDRIVER
PHILLIPS SCREWDRIVER

**NOTE: MAKE SURE ALL SCREWS IN ASSEMBLY ARE SNUG. DO NOT OVER-TIGHTEN.**

INSTALLATION:

1. USING FLAT BLADE SCREWDRIVER GENTLY PRY OFF THE LEFT FAIRING MOLDING (1A) STARTING FROM THE BOTTOM. TAKE CARE SO AS NOT TO BREAK OFF MOUNTING LEGS.

2. USING 5MM ALLEN WRENCH, REMOVE THE BOLT (1B) LOCATED UNDER FAIRING MOLDING (1A).

3. PLACE THE WIND DEFLECTOR ASSEMBLY (2A) IN PLACE SO THAT THE MOUNTING BRACKETS FIT INTO THE GROOVE ON THE FAIRING.

4. SECURE INTO PLACE USING THE SOCKET HEAD BOLT (2B) REMOVED IN STEP 2 AND THE NEW PHILLIPS SCREW (2C) PROVIDED.

5. FOLLOW STEPS 1-4 FOR THE RIGHT SIDE.
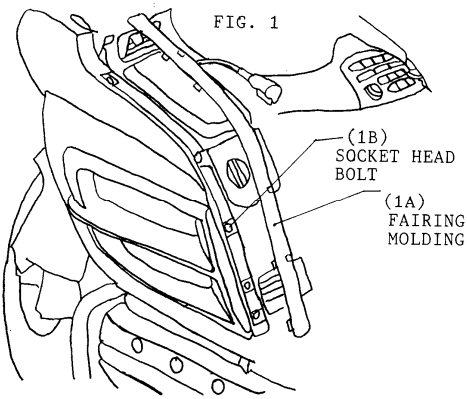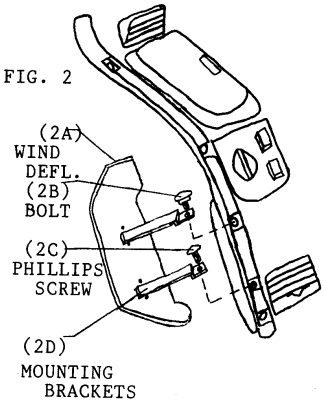
6. REINSTALL THE FAIRING MOLDING (1A) ON BOTH SIDES PRESSING THE TOP IN FIRST AND GOING DOWN.